History of Rocketry and Astronautics

Proceedings of the Twentieth and Twenty-First History Symposia of the International Academy of Astronautics

Innsbruck, Austria, 1986

Brighton, United Kingdom, 1987

Lloyd H. Cornett, Jr., Volume Editor

R. Cargill Hall, Series Editor

AAS History Series, Volume 15

A Supplement to Advances in the Astronautical Sciences

IAA History Symposia, Volume 9

Copyright 1993

by

AMERICAN ASTRONAUTICAL SOCIETY

AAS Publications Office
P.O. Box 28130
San Diego, California 92198

Affiliated with the American Association for the Advancement of Science
Member of the International Astronautical Federation

First Printing 1993

ISSN 0730-3564

ISBN 0-87703-376-5 (Hard Cover)
ISBN 0-87703-377-3 (Soft Cover)

Published for the American Astronautical Society
by Univelt, Incorporated, P.O. Box 28130, San Diego, California 92198

Printed and Bound in the U.S.A.

Chapter 6

PROJECT HORIZON: AN EARLY STUDY OF A LUNAR OUTPOST*

Frederick I. Ordway III, Mitchell R. Sharpe, and Ronald C. Wakeford†

At the crater known to our astronomers as Tycho . . . millions of lenses were made, for the capturing of sunlight. . . The largest of these solar power plants was located at Tycho, while two others were located on the other side of the moon near each edge of the vast depression. R. H. Romans, *The Moon Conquerors*, Science Wonder Stories (1930).

A wealth of scientific data can be obtained from experiments conducted at a lunar outpost. Without doubt, the scientific community will generate many new and unique applications as man's actual arrival on the moon draws nearer reality. The very absence of knowledge about the moon and outer space is scientific justification to attempt to breach this void of human understanding. Project Horizon Report, U.S. Army Ordnance Missile Command (1959).

The establishment of a lunar outpost would be a significant step outward from Earth—a step that combines adventure, science, technology, and perhaps the seeds of enterprise. Exploring and prospecting the moon, learning to use lunar resources and working within lunar constraints, would provide the experience and expertise necessary for further human exploration of the solar system. Leadership and America's Future in Space, NASA report (1987).

The concept of traveling to the Moon goes back centuries in fictional literature [1]. The possibility of establishing a permanent manned presence there is a more recent theme, one frequently treated by 20th century science fiction writers, and, to a lesser extent, by those of nonfiction. In 1931, the president of the American Interplanetary (later, Rocket) Society, David Lasser, explained the benefits arising from the exploration of Mars, Venus, and the Moon and the possibility ". . . for men to colonize and live on them" [2]. Five years later, British Interplanetary Society President, P. E. Cleator, wrote that despite the extreme environmental conditions to be found on the Moon, ". . . it seems likely that an outpost will be established there" [3]. He concluded that ". . . the most feasible location for a lunar habitation . . . is underground."

* Presented at the Twenty-First History Symposium of the International Academy of Astronautics, Brighton, United Kingdom, 1987.

† Both Frederick I. Ordway, III and Mitchell R. Sharpe were members of the Alabama Space and Rocket Center, Huntsville, Alabama when this paper was presented. Sharpe has since retired. Ronald C. Wakeford is with C.E.T.C., Washington, D.C.

Five years after the end of World War II hostilities, in 1950, British Interplanetary Society member, G. V. E. Thompson, observed that "The establishment of some kind of base is clearly essential for the proper study and development of our Moon" [4]. A couple of years later, fellow BIS member, Arthur C. Clarke emphasized that "If we are to set up permanent [lunar] colonies, it is essential to discover oxygen, water and materials from which food may be obtained" [5].

Thompson and Clarke were followed by rocket expert Wernher von Braun, astronomer Fred L. Whipple, and science writer Willy Ley, who collaborated with editor Cornelius Ryan and artists Chesley Bonestell, Fred Freeman, and Rolf Klep in a series of space articles that appeared in the now defunct *Collier's* magazine. Some of these were expanded to form the book *Conquest of the Moon* published in 1953 [6]. In it, a full chapter was devoted to the construction of a base on the Moon. Wrote von Braun, *et al.*:

> The crevice chosen for the lunar headquarters will be deep—we will require a depth of 65 to 100 feet for safety—with almost vertical sides. The cranes on the rear of our lunar tractors will lower an advance squad down to the floor of this chasm. This group will clear the way for the two prefabricated buildings; using pickaxes and small explosive charges, they will level off the ground. Now we will begin to assemble our lunar base.

This was but a preamble of what was to come. Just 6 years after the publication of *Conquest of the Moon*, the Army Ordnance Missile Command (AOMC) located at Redstone Arsenal in Huntsville, Alabama, assisted by Army Technical Services, compiled a comprehensive and ambitious study of a manned lunar outpost. By early June 1959, only 3 months after work had begun, a four-volume report [7] had been completed and submitted to U.S. Army Chief of Staff, General Maxwell D. Taylor, under the designation "Project Horizon" [8]. In it, the feasibility was examined of establishing a lunar outpost by late 1966. Horizon was the outgrowth of systems studies of the Saturn family of launch vehicles undertaken in late 1958 and continuing into 1959 in which transportation to and from the Moon had been examined as a typical task [9].

PURPOSE AND SUMMARY

Project Horizon was a pioneering study prepared by the U.S. Army to further the exploration of space. Its purpose was to: (1) design and establish a lunar outpost from which further exploration of, and operations on, the lunar surface could be mounted; and, (2) provide a supporting capability for other operations in space. Among the major objectives cited in the Horizon report were to:

1. Support scientific exploration and investigation;
2. Extend and improve space reconnaissance and surveillance capabilities;
3. Extend and improve communications and serve as a communications relay station;
4. Provide a basic and supporting research laboratory for space research and development activity;
5. Develop a stable, low-gravity outpost for use as a launch site for deep space exploration;

6. Provide an opportunity for scientific exploration and development of a space mapping and survey system; and,

7. Provide emergency staging areas, rescue capability or navigational aid for other space activity.

Serious planning for a lunar base was considered feasible in 1959 because of advances in rocketry, a rapidly evolving launch vehicle program, recent satellite and space probe developments, and the momentum created by Horizon itself. The study was concerned with the development and operating characteristics of a 12-man lunar outpost. Such an outpost, it was then envisaged, could become operational by November, 1966. Confidence in the project was high among the scientists and engineers associated with the then budding spaceflight program. Though Horizon as such was never undertaken, the study did contribute to strengthening the planning and technological base that led to the Apollo program, which was formally initiated a few years later.

Launch capability was to be based on Saturn family designs under study during the late 1950s. The number of vehicles needed to build the proposed lunar outpost was 61 Saturn Is and 88 Saturn IIs. The Horizon study team estimated that 245 tons of construction material, equipment, and supplies would have to be transported to the Moon, and that the total program cost would slightly exceed $6 billion U.S. over an 8-1/2 year period. This number was compared with the then-current annual American defense budget of some $42 billion. Considering the magnitude of the proposed operation, the expenditure was considered realistic by many; some even thought it modest. In retrospect, that $6 billion estimate was decidedly unrealistic.

Project Horizon's authors observed that additional data were needed to determine precisely where on the Moon the outpost should be situated. As for the launch site on Earth, standard sites in Florida and California were judged to be too far from the equator to undertake optimum operations. Accordingly, several alternatives were examined. Though these aspects were discussed at considerable depth in the report, it was noted that final decisions regarding launching from Earth and establishing an outpost on the Moon would have to await the results of planned unmanned lunar probes as well as political negotiations for sites at or near the equator.

The schedule for establishing the lunar outpost, together with the type and number of launch vehicles required, are shown in Figure 1. The magnitude of the program is apparent.

PREPARATIONS FOR HORIZON

On 15 December 1958, 6 months before the publication of the Project Horizon report, personnel of the Army Ballistic Missile Agency (ABMA) were asked by the newly created National Aeronautics and Space Administration (NASA) to make a presentation on the U.S. Army's capabilities to provide large launch vehicles with lunar delivery capabilities [10]. At the same time, the U.S. Air Force was requested to make a presentation on its capabilities.

Number of flights for designated dates

Vehicle and mission	1964 J	A	S	O	N	D	1965 J	F	M	A	M	J	J	A	S	O	N	D	1966 J	F	M	A	M	J	J	A	S	O	N	D	1967 J	F	M	A	M	J	J	A	S	O	N	D	Total Flights
Lunar soft landing vehicle (direct)																																											
Saturn II							1	1	1	1	1	2	2	2	2	1	2	2	2	2	2	2	2	2	3	2	3	2	3	2	3	2	2	3	2	2	3	2	3	2	2	2	73
Earth-orbit and return (manned)																																											
Saturn I	1		1		1		1		1		1	1	1		1		1		1		1		1		1		1		1														16
Saturn II																															1		1		1		1		1				6
Earth-orbit (cargo)																																											
Saturn I	1	3	1	3	3	4	3	3	2	2	3	2	3	3	2	2	1	1	1		1		1		1		1				1												47
Saturn II			1				1	1	1	1			1	1	1	1	2	2	3	3	2	3	2	3	3	3	3	3	2	2	2	2	3	2	2	3	2	2	3	2	2	3	71
Emergency vehicles																																											
Saturn I							1	1			1							1					1				1																	6
Saturn II													1				1		1		1		1						1		1				1				1				10
Orbit-lunar soft landing (cargo)							1											1							1				1														4
Orbit-lunar soft landing (manned)										1		1			1					1			1				1					1			1			1					10
Lunar-Earth return													1		1				1		1				1							1		1			1						8
Total																																											
Saturn I	2	3	2	3	4	5	5	3	3	3	4	3	4	3	3	2	3	1	2		2	1	2		2	1	1		2														69
Saturn II			1			1	2	2	2	2	2	3	3	3	2	4	4	5	5	5	5	5	5	6	5	6	6	6	4	5	6	5	6	5	6	5	6	5	6	5	6	5	6	160
Total carrier vehicles for Project Horizon	2	3	3	3	4	6	7	5	5	5	6	6	7	6	5	6	7	6	7	5	7	6	7	6	7	7	7	6	6	5	6	5	6	5	6	5	6	5	6	5	6	5	6	229

Figure 1 Project Horizon vehicle requirements and launching schedule, 1964-1967.

The briefing team from ABMA included von Braun, Ernst Stuhlinger, and Heinz Hermann Koelle. Dr. von Braun addressed his remarks to the subject "Present and Future Vehicles and their Capabilities" and "ABMA Contributions in the Area of Earth-launched Vehicles," Koelle to "Vehicle-Mission Compatibility and Systems Integration" and Stuhlinger to "Vehicle Components and Research Objectives."

Wernher von Braun was frank and unprejudiced in his initial presentation, pointing out that "We have also omitted from this chart all vehicles not representing the maximum available at that particular time." He gave, as an example, the superior performance of an Air Force Thor-based launch vehicle as compared to his own Jupiter-based carrier. "I hope," he added, that "this is considered as proof of our unbiased approach. . ."

Koelle cautiously mentioned "And last, but not least—this we consider a very important point—maybe, in the spring of 1967, we will have developed a capability of putting the first man on the moon. And we still hope not to have Russian Customs there."

Stuhlinger was more circumspect and, perhaps deliberately, ambiguous in his presentation. He confined himself largely to technical details. However, he did say, "I do not believe that we can obtain a comprehensive picture of the moon or planets before we have men there. . . ."

Comments such as this anticipated Project Horizon, as did several illustrations and textual material. Clearly, the conceptual seeds of Horizon were antecedent in ABMA before its formal involvement in the Horizon study 6 months later. There were a few research projects in Stuhlinger's laboratory, funded strictly by ABMA, that looked to a manned lunar base. Typically, there was the development of an electrically powered drill that could be used to take lunar core samples to a depth of approximately 3 feet.

INITIATION OF HORIZON

The Horizon study was initiated by a letter dated 20 March 1959 from the Army's Chief, Research and Development, Lieutenant General Arthur G. Trudeau, directed to Chief of Ordnance, Lieutenant General John H. Hinrichs. Coordination and editing of the study was immediately assigned to AOMC, which was commanded by Major General John Bruce Medaris. On 3 April 1959, Medaris tasked the Army Ballistic Missile Agency (ABMA), commanded by Brigadier General John A. Barclay. Within ABMA, Wernher von Braun's Development Operations Division supervised and coordinated the study. Specific responsibility was given to Future Projects Design Branch of the Structures and Mechanics Laboratory with support from six Army Technical Services in addition to Ordnance: Signal, Engineers, Quarter-master, Chemical, Transportation and Medical (see *Addenda*).

After the original four-volume Project Horizon report appeared, the possibility increased that the ABMA/von Braun rocket team would be transferred to NASA. This led to the preparation of a revised and shortened version [11] that carried the date 9 June 1959. Despite this, the official transmittal to NASA did not occur until many months later. On 25 March 1960, Colonel R. E. Peters, Ordnance Corps executive officer in Washington, advised General Medaris that "Project HORIZON has been forwarded by the Secretary of the Army [Wilbur M. Brucker] to the Secretary of Defense [Neil H. McElroy], who has further transmitted it to NASA [Administrator Dr. T. Keith Glennan] for such use as may be desired. Therefore, the limited access aspects of this project no longer apply." The report was actually transmitted on 7 March 1960 by the Director of Defense Research and Engineering at the Pentagon [12].

UNDERTAKING THE HORIZON STUDY

Inside ABMA, the Future Projects Design Branch, under Heinz Hermann Koelle, coordinated the Horizon study. Organizationally, Koelle reported to Willi Mrazek, director of the Structures and Mechanics Laboratory, but, in actual fact, had a direct line of communication with both Medaris and von Braun. Working closely with Koelle were Frank L. Williams and William J. Huber. Outside of Future Projects, many others were involved with the preparation of the Horizon study. Among them were Captain Homer Finch and Major Rutledge P. Hazzard of ABMA and Harry H. Lowe of the Corps of Engineers.

When queried as to the origins of Project Horizon, Koelle [13] suggested that it resulted from a meeting between Brucker and Medaris. But Williams [14] recalls that the idea was generated in Washington, D.C. during a conversation he had with Lieutenant Colonel Nels A. Parson, Jr. of Army Research and Development. Seeking to maintain Army leadership in space development, they proposed that the feasibility be studied of establishing an outpost on the Moon. Furthermore, it was felt vitally important to involve in the endeavor all major components of the Army, not just the von Braun rocket team at Redstone Arsenal in Huntsville.

As far as Williams can recall, Parson took the idea to Trudeau who, in turn, briefed Taylor and Brucker. They were receptive and soon thereafter Medaris and

AOMC were brought into the picture. Hazzard [15] concurs: "My first recollection is that when General Medaris came back from a trip to Washington, he announced to a small group that there was going to be this study of the feasibility of going to the Moon. He had a great deal of authority from someone, who I always had the impression was the Secretary of the Army . . . with the full backing of the Chief of Army Research and Development." The result was a 90-day study.

And why 90 days? Williams recollects that Taylor was due to retire at the end of that period, and wanted the study completed while he was still Chief of Staff. He did, in fact, retire on 30 June 1959, and was followed the next day by General Lyman Louis Lemnitzer.

Following the original presentation of this paper, Medaris stated in an interview that Horizon was conceived during:

> . . . talks between Wernher [von Braun] and myself back in the 1950s. We'd always talk after launches at Cape Canaveral about what we were thinking and where our imaginations were leading us. We came up with this idea, jointly, that we were able at that time to project an ability to go to the Moon. . . We were always working our imaginations into the future because that was what we were challenged to do all the time. And Horizon had its natural genesis during our conversations, sitting there with our feet up and relaxed and letting our imaginations run for three hours each time. That's when this thing [e.g., Horizon] had its genesis [16].

According to Koelle, von Braun himself was not involved in the day-to-day planning of Horizon; but, he adds, ". . . I reported to him directly . . . on a weekly basis. He was fully informed, and I made sure that his ideas and preferences became part of the strategy developed." However this may be, Ernst Stuhlinger [17] felt that von Braun was unimpressed with Horizon from its inception. "After initial briefings by Koelle," Stuhlinger reflects, "and some periodic progress reports, von Braun had no inputs." As for Medaris, Koelle stated that "He was kept informed but did not provide technical inputs." Koelle remarked that no contractor support was employed for Horizon, for ". . . there was not time for it, for the original work was done in 3 months from April to June [1959] . . . the project was kept secret within the ranks of the Army, because they wanted to get the role and mission assignment in a competitive environment."

"Security was very tight [recalls Koelle], I coordinated the contacts outside the task force. The project officers of the [Army] Technical Services were co-located in my office. The task force had about 30 people. I worked through the project officers, but it was pretty much a closed shop. We had daily meetings; in fact, one meeting followed the other." Williams reckons that the task force was larger, numbering about 50 individuals.

Medaris remembers [18]:

> The first thing we did was to establish what we called 'the green door,' a reserved place at command headquarters that had no access except to people who were specially cleared for this [Horizon] project. We had an engineer officer with us who was highly competent, and we had a transportation officer who was also highly competent. We then told the [Technical] Service chiefs . . . that we wanted to be able to call on any resources that they might have that would be useful to us.

Hazzard remembers the arrivals, shortly after the Horizon study got under way, of many representatives of the Technical Services:

> . . . [O]ne of the first tasks that I had was finding a place for these people to work. And that turned out to be no mean task. When they arrived, we found desks and space for them all over the place. . . . I remember one of the medical officers, who was a brigadier general. I ended up finding for him a desk literally in a dirty room in an un-airconditioned warehouse! I thought he would take great offense at this, but he was very gracious about the whole thing. He perceived that we were in a tough situation.

Hazzard estimates that the total access list of people involved with Horizon was nearly 60 persons, a figure double Koelle's, but rather close to Williams' estimate, which included men from Army Technical Services. Much of the correspondence generated during the Horizon study was handled by Lieutenant Colonel James Nelson Jean. Captain James R. Butterworth assisted Hazzard, eventually taking over his position when the latter was transferred out of Redstone. Hazzard himself reported to Colonel Sterling C. Holmes.

Later, in 1974, when the Horizon project had been declassified, Medaris explained that "It was a team project. We grabbed every specialist we could get our hands on in the Army. But, we were forbidden to talk about it because we didn't have the missiles [launch vehicles]." He added that the project ". . . was absolutely valid and went beyond landing on the moon to the development of a scientific laboratory-station on the moon. . . . It would cost substantially less [than the approx. U.S.$23 billion for Apollo]." As to NASA's receiving a copy of the report, he commented that they ". . . never would admit that they saw it, but I think they did" [19].

THE LUNAR OUTPOST

The proposed lunar outpost, whose layout is seen in Figure 2 and initial construction in Figure 3, was to be a permanent facility capable of supporting an ultimate complement of 12 men. It was designed around cylindrical tanks, 20 feet in length and 10 feet in diameter, whose dimensions and external features were equal to standard cargo tanks. Plans called for some equipment and facilities to be built into the tanks on Earth to facilitate their ready conversion into a livable lunar shelter.

Design Considerations

The completed outpost was to consist of the ten sub-surface personnel compartments depicted in Figure 2, three of which were to be air locks. Power for the base was to be provided by four nuclear reactors of 60, 40, 10 and 5.0 kW, respectively; they would serve various needs. Of the ten units, two were to be living quarters with a complement of 6 men each. Other modules would accommodate dining and recreation, signals and communications, hospital, and space for toilet and storage facilities. The outpost was to be located underground to take advantage of the insulating properties of lunar material, and to afford protection from solar radiation and micrometeorites. All outpost units were to be buried and covered by 3 feet of lunar material.

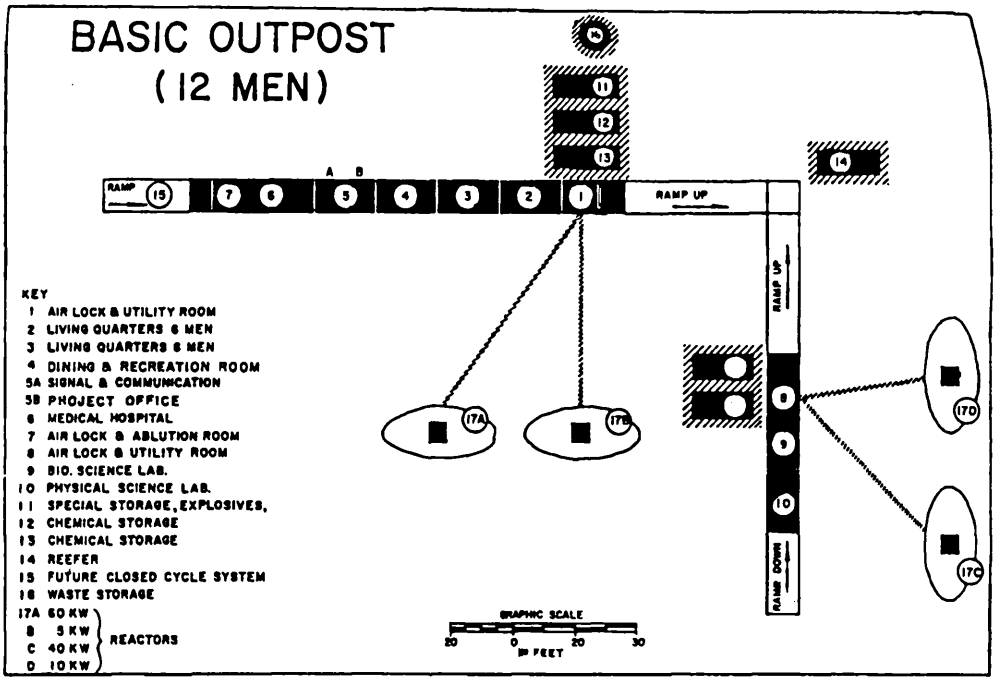

Figure 2 Basic outpost (schematic) – (12 men).

The tank design was based on the use of titanium alloy for both outer and inner skins. The double-walled module would be separated by a 1-inch vacuum space filled with insulating material. In addition to the standard housing modules, propellant tanks taken from the lunar landing vehicles (similarly configured to the cargo tanks) were to be used for storage and other purposes.

The outpost's internal environment was to be heated electrically by a nuclear reactor power source, which would also provide for lighting and air-conditioning. Externally installed tanks would store liquid oxygen and nitrogen needed to assure an Earth-like atmosphere. Contaminants were to be removed from the atmosphere by means of a carbon dioxide freeze-out system.

Food and water would reach the Moon periodically in cargo-landing vehicles. Food would be pre-cooked, individually packaged, and provided in a paste form for crews occupied in external operations. Water would also be supplied by cargo vehicles, supplemented by a recovery system designed to reduce the amount required in the logistic's chain.

Scientific Program

A major feature of the outpost was to be two laboratories, where experiments would be conducted and data analyzed. Converted from soft-landed cargo flights, they were to serve both the biological and physical sciences. The bio-sciences laboratory was to be equipped for analytical chemistry, bacteriology, microscopy and

radiological study and measurements and would also incorporate facilities for the containment and care of small animals for observation and test.

The physical science laboratory was designed to obtain information in the following areas:

1. Physical and chemical characteristics of selenological specimens;
2. i.r., visible, u.v., X-ray, *y*-ray and cosmic ray spectroscopy;
3. Lunar atmospheric measurements of pressure, density, meteoroid bombardment rate and galactic dust;
4. Observations of the planets and stars;
5. Measurements of magnetic field of the Moon;
6. Surface and sub-surface thermal and mechanical properties; and,
7. Determination of lunar gravitational constant and seismic conditions.

It was proposed that these laboratories be manned by four scientists who would be capable of undertaking the above studies.

Construction

The outpost was to be constructed of materials delivered by 9 Saturn IIs. Launched directly from the Earth, their payloads would include all materials needed to establish an initial construction camp at the lunar site. The plan was for a 2-man team to land on the lunar surface, followed 3 months later by a 9-man construction team.

All manned lunar vehicles were to be launched from Earth-orbit; however, two-thirds of the cargo delivered to the site would be soft-landed by the direct launch method. The build-up program would require 61 Saturn I and 88 Saturn II launchings through November 1966. During this period, a minimal Earth-orbit refueling capability would have been established.

The initial 2-man exploration crew was to be responsible for verification of previous unmanned environmental investigations, and confirmation of the site selection and cargo delivery aspects of the endeavor. The 2 men would live in the delivery capsule and would return to Earth shortly after the arrival of the 9-man construction team. This team would be responsible for building the construction camp, which was to take about 15 days. The men would live in the landing capsule until housing was completed.

Figure 3 shows the 12-man outpost under construction. In the center background, some of the outpost modules have already been buried under 3 feet of lunar material, while in the foreground compartments have just been, or are being, placed into position by the lunar construction vehicle.

One of two surface vehicles planned for the operation is used for lifting, excavating, covering, and so forth; the other serves for hauling, reconnaissance and rescue. Figure 4 depicts a lunar construction vehicle digging a trench to house the cylindrical construction modules; it is powered by two 4 h.p. electric motors ener-

gized by a fuel cell. Approximately 15 feet long, 6 feet wide and 6 feet high, it would incorporate such attachments as fork lift arms, rooter teeth, dozer blade, winch, crane boom, and a power takeoff for activating other construction equipment.

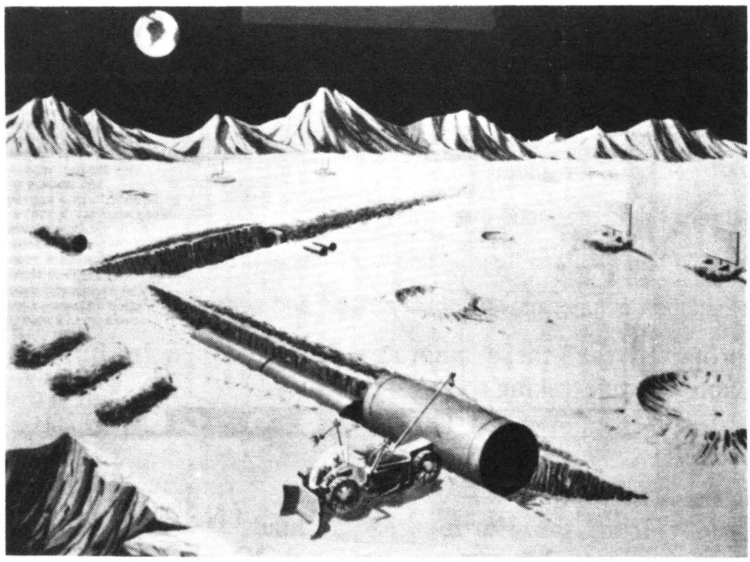

Figure 3 Photograph of 12-man outpost under construction.

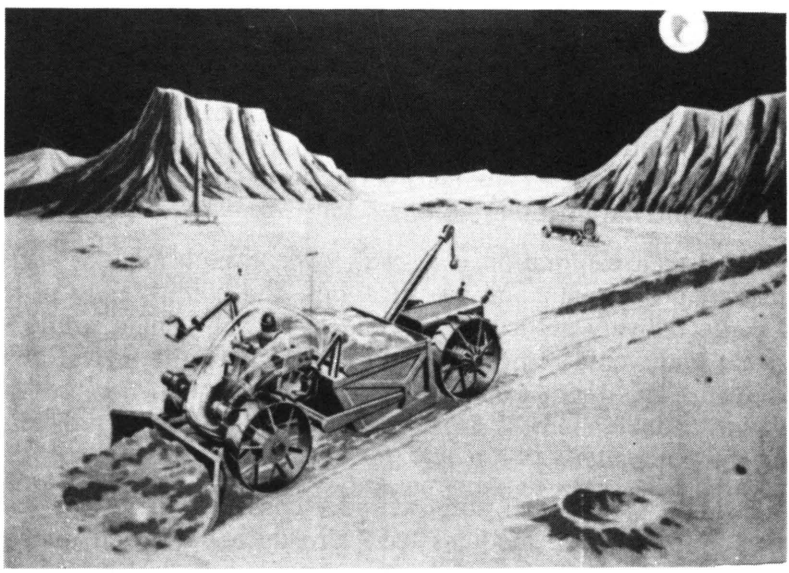

Figure 4 Lunar construction vehicle digging a trench.

A major role of the lunar transportation vehicles, shown in Figure 5, is to move soft-landed cargo packages to the construction site. They were visualized as skeletonized units of light-weight construction with a load-carrying capacity of 1,000-6,000 pounds. A wide range was established to take into account the variety of lunar surface conditions and cargo densities. It was estimated that with a battery

weight of 500 pounds these vehicles could operate continuously for 1 hour over a range of about 50 miles.

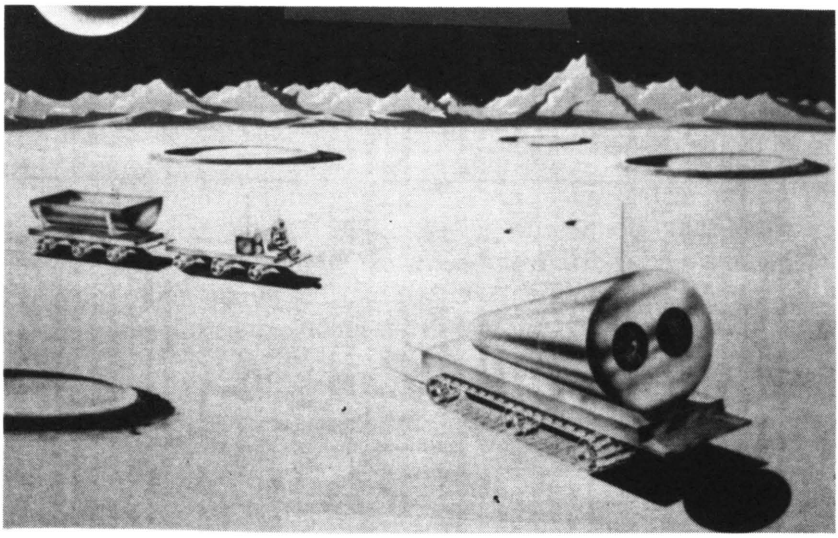

Figure 5 Lunar transportation vehicle.

Crew Rotation and Outpost Manning

The Horizon team proposed that construction materials be delivered commencing January 1965 and continuing through November 1966 (when the 12-man outpost was to become operational). Saturn II was to be the launch vehicle for landing construction cargoes on the Moon. The initial 2-man crew would reach the Moon with the capability of returning to Earth immediately after arrival. They would do so in a Moon-Earth return vehicle.

Next to arrive would be a 9-man construction crew with *no immediate return capability*. Delivery of this group would be accomplished by using a modified version of the orbital refueling operation. The third manned flight would carry a crew of 4 with a return capability to Earth for 3 of the original 9 men comprising the construction crew. At this time, a total of nine men would be at the outpost, since the first 2 men would have already departed. On the next three flights, 4 men arrived and 3 would depart; at the completion of this schedule, there would be 12 men on the Moon, living in the operational base.

With the required outpost complement of 12, all succeeding flights would bring 4 men to the Moon and return 4 to Earth. This return operation through 1967 would require a total of 8 vehicles, the first returning 2 men. The next 4 vehicles would return 3 men, and the remaining 3 vehicles 4 men. The 3- and 4-man Earth return vehicles were to be upgraded versions of the original 2-man configuration.

Landing Site

The precise location of the lunar outpost was to await results obtained from future unmanned lunar probes. However, an area bounded by approximately 20° latitude/longitude of the Moon's optical center was established for design purposes.

Such considerations as temperature, rocket vehicle energy requirements, and communications were evaluated to identify a preferred general region for establishing the base. A final decision was to rest on satisfying the three broad requirements that the landing site be suitable for: (1) arriving from and departing for Earth; (2) living in shelters; and, (3) carrying out missions that required movement across the surface. Figure 6 indicates the most promising area selected by the study team; it is encompassed by the dashed lines.

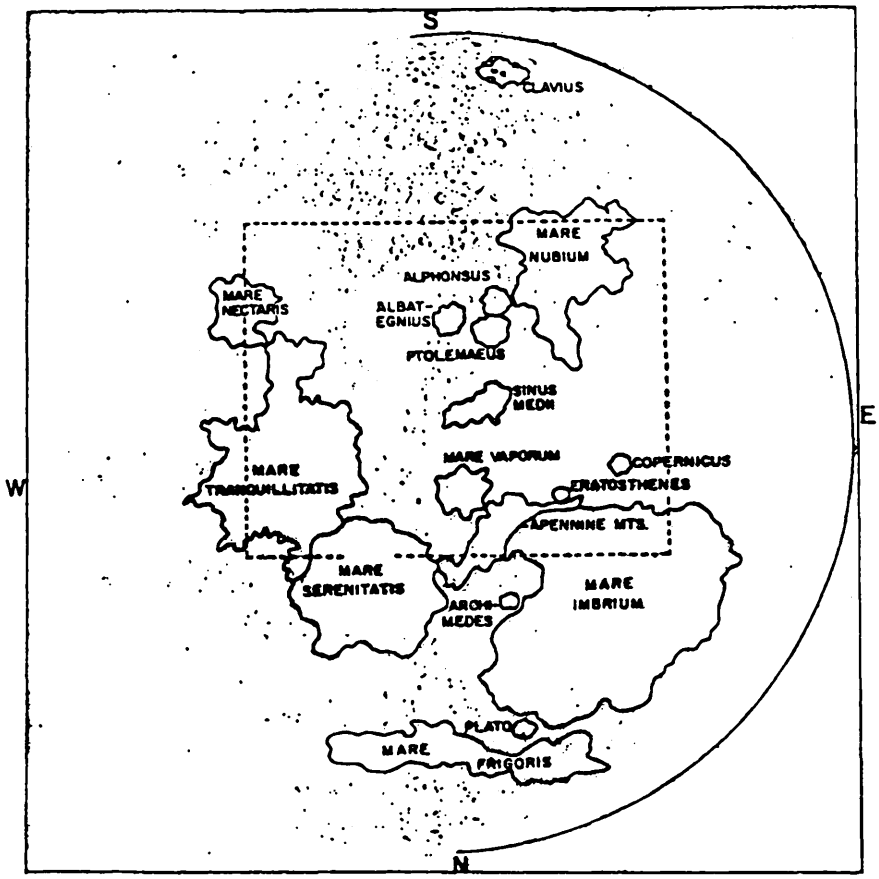

Figure 6 Map of area selected for possible lunar outpost.

SATURN LAUNCH VEHICLES

Two launch vehicles were required by Project Horizon, Saturn I and Saturn II. The former, under development at the time of report preparation, was scheduled to become operational in October 1963, Figure 7 compares them.

Saturn I

The three-stage Saturn I configuration envisioned back in 1959 was to generate a first-stage thrust of 1-1/2 million pounds, its twin-engine second stage 360,000 pounds of thrust, and its liquid oxygen/liquid hydrogen third stage 30,000 pounds. The second and third stages were to be modified versions of the Titan booster and

the Centaur, respectively. Payload performance calculated for this launch vehicle was over 30,000 pounds delivered into a 96-minute Earth orbit and 7500 pounds projected along an escape trajectory. It is important to note that this 1959 Saturn I configuration is *not* to be confused with later two-stage Saturn Is, that were built and launched during the 1960s in connection with the Apollo program.

The primary role for Saturn I was to deliver manned and cargo payloads into Earth-orbit. Commencing in 1964, and culminating in the establishment of the lunar outpost in late 1966, a total of 61 flights was planned. The priority payload for the Saturn I was propellants for orbital fueling of manned lunar vehicles. For this purpose, some 40 flights were to be launched into Earth-orbit. Manned vehicles for the refueling operation numbered 15 during the buildup to a fully operational lunar base. Miscellaneous duties, including the emergency vehicles, accounted for the remaining flights.

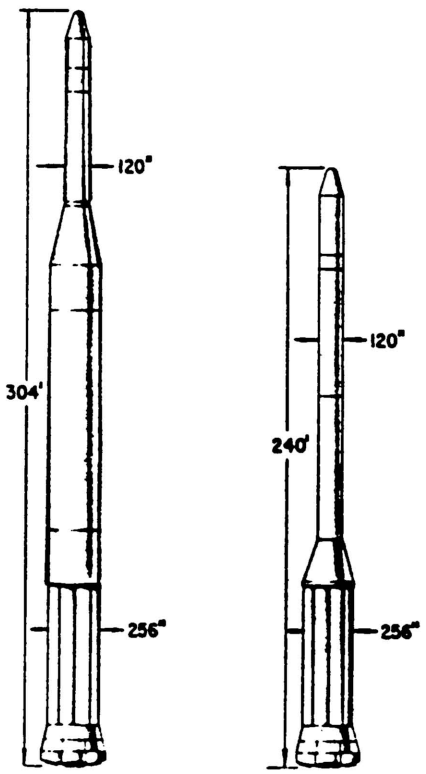

Figure 7 Scale comparisons of Saturn I and II.

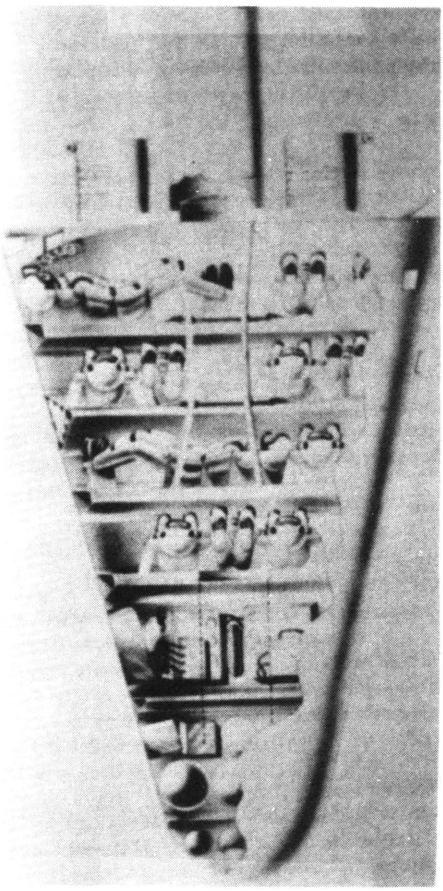

Figure 8 Re-entry body proposed for orbital refueling and other functions.

Saturn II

The Saturn II was to have four stages and be capable of delivering 70,000 pounds of payload into a 96-minute Earth-orbit and 27,000 pounds along an escape trajectory. It was to develop 2 million pounds of first-stage thrust at sea level. The second stage was to incorporate two 500,000 pound thrust engines and the third, two 100,000 pound thrust engines. The fourth and final stage was to be powered by a single 100,000 pound thrust engine. Saturn II's missions included lunar soft-landing vehicles launched directly from Earth, Earth-orbit cargo vehicles, and emergency missions.

ORBITAL OPERATIONS

The development of an elaborate orbital space platform to facilitate Project Horizon operations was considered, but cost and time factors led to its rejection in favor of a minimal orbital refueling capability. As a result, no construction activity was planned in the Earth-orbital environment. Instead, designs concentrated on the use of Saturns as fuel-carrying vehicles to support manned lunar launch needs. Simple in concept, converted fuel tanks could be used for housing the refueling crew, who could also remain temporarily in the orbital return vehicle (see below).

Orbital Return Vehicle

The vehicle proposed to undertake orbital refueling and other functions, was a re-entry body containing a storable liquid-propellant engine. Its job was to furnish the required impulse for rendezvous and retro-kick for returning (Figure 8). The vehicle was to accommodate from 10 to 16 men, depending on mission requirements. For the orbital refueling of manned-lunar-transport vehicles, a 10-man crew was recommended. The re-entry body would contain seats, instruments for communications, and re-entry maneuvering and survival equipment. It was also to be capable of housing a few men for short periods in orbit, and so become a temporary satellite. For extended periods, and with more men (see above), the empty propellant containers would be outfitted to serve as living quarters.

Aerodynamic braking of the orbital return vehicle was to be patterned after the successful recovery of four Jupiter intermediate-range ballistic missile nose cones, which had recently flown into space. One of the flights contained two primates, who were successfully recovered. This experience led to the design of a ballistic re-entry system, using body-lift to provide a partial glide capability. By this means, it was felt that landing within an accuracy of a few miles could be achieved. Final descent was to be based on parachute recovery techniques tested during Jupiter nose-cone experiments. Both the orbital return and direct lunar launch vehicles were to be configured to accomplish re-entry from space in this manner.

Fueling in Orbit

Used as a tanker, Saturn I was to carry the refueling propellants into orbit. Equipment sent into orbit was to include manifolds for interconnecting tankage, meters for fuel and oxidizers, and a transfer hose with valving and disconnects. It was planned to orbit check-out equipment to verify the integrity of all systems prior

to launch. A 10-man crew was recommended for refueling manned lunar transport vehicles.

The study team also considered the design of a manned space platform assembled from empty cargo containers. However, this was subsequently felt to be a luxury, and was only to be implemented at a later date. Completing the development of the lunar outpost, within the time limits established, was the study team's first priority.

LUNAR LANDING VEHICLES

The choices made by the Horizon team for the delivery of payload to the lunar surface were based on two lunar-landing vehicles. As already noted, in 1965 emphasis was to be placed on the direct transfer method. Accordingly, some 18 Saturn II launches were to deliver cargo to the lunar surface during that year. By comparison, only four orbitally-launched vehicles were envisaged during the same period.

Direct Launch Approach

The direct approach lunar-landing vehicle, illustrated in Figure 9, was to be launched by Saturn II. Fifty feet high and with twin engines, it was designed to carry building-block modules for lunar outpost construction. Its weight (in pounds) is given in Table 1.

It was calculated that it would take 51 hours to send the cargo landing vehicle to the lunar surface, a very fast approach requiring the expenditure of considerable energy for braking at the lunar end of the trajectory. (By way of comparison, American Ranger impact probes would later take from 64-1/2 to 68-1/2 hours to cover the Earth-Moon distance and Surveyor soft landers between 63-1/2 and 65 hours). The landing technique proposed for Horizon's final maneuver would require some hovering, although no overly difficult terminal landing problems were envisioned. Unmanned probe flights, earlier launched by Saturn Is were to have provided information on guidance system design characteristics. Saturn I's ability to deliver some 500 pounds of payload to the Moon was to pave the way for the implementation of Saturn II cargo delivery.

Orbital Launch Approach

The Earth-orbit-launched system was developed around a three-stage vehicle (Figure 10) brought into orbit by Saturn II. The first stage would develop 200,000 pounds of thrust and transfer cargo onto a lunar trajectory. Second stage performance was designed to accomplish both braking and completion of the soft-landing maneuver. These two stages would deliver an active payload package of some 48,000 pounds to the lunar surface. This payload package (the lunar landing vehicle) is seen in Figure 11. Also shown is the empty-second stage lunar-landing system, whose hardware was to serve as the launch pad for returning crews to Earth.

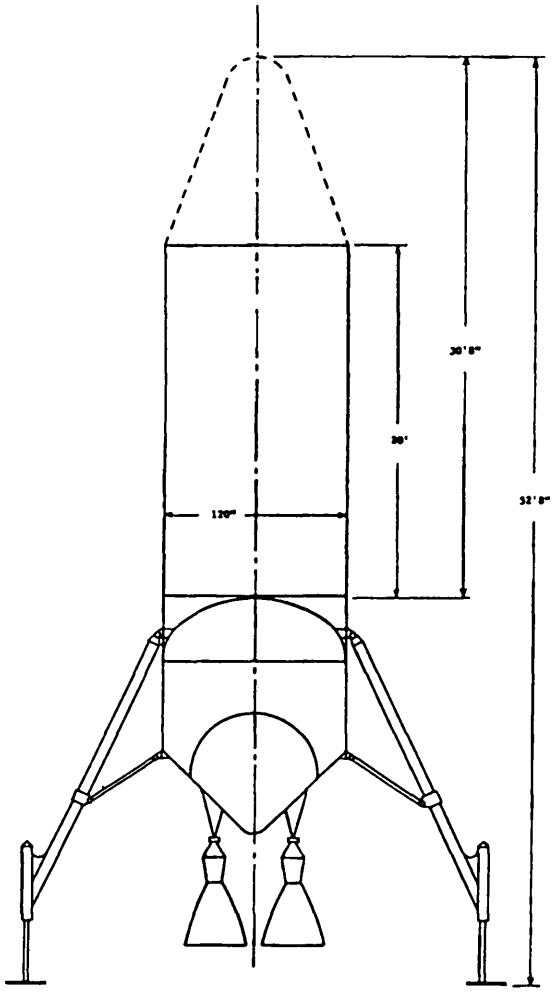

Figure 9 Lunar-landing vehicle scale drawing.

Table 1

DIRECT APPROACH LUNAR LANDING VEHICLE	(weight in lbs.)
Payload and payload capsule (including compartment)	6,000
Guidance and Control	2,000
Allowance for weight increases	540
Total structure (with engine, landing gear, hydraulics, electronics, etc.)	2,970
Propellants	15,240
Total weight	26,750

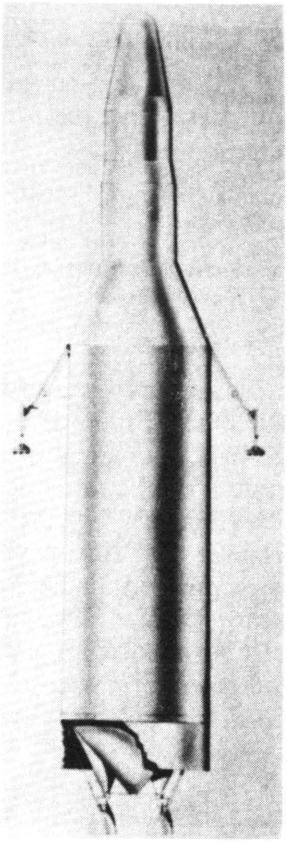

Figure 10 Three-stage vehicle proposed for Earth-orbit-launch system.

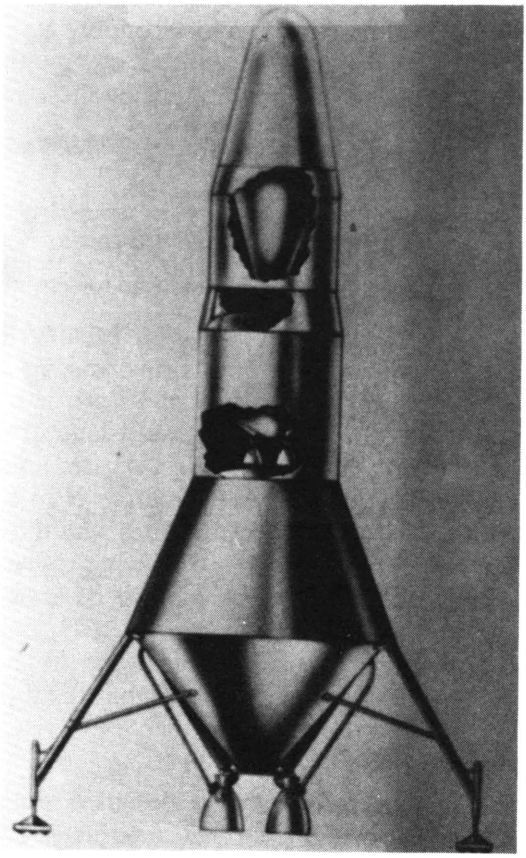

Figure 11 Lunar landing vehicle.

Earth Return

The single-stage return vehicle was to be capable of transporting 2 men to Earth. An improved version of the same vehicle would eventually return 4 men to the vicinity of the launch site. Final launch weight from the lunar surface would be approximately 46,500 pounds and cutoff weight some 14,000 pounds. Of this latter, 8,000 pounds were budgeted for the manned capsule.

Plans called for an automated command and control system with a minimum crew override capability. The guidance and control system would consist of a combination of inertial, radio inertial, and celestial inertial devices. Both vehicle-borne and Earth-based computers were to be integrated into a comprehensive command and control center located at the launch site. Parachutes would be employed to set the capsule down gently on Earth.

The design of a larger lunar-launch-Earth-return system was also considered by the Horizon team. However, established time constraints placed this possibility beyond the 1966 date set for outpost operations.

LAUNCH SITE AND COMMUNICATIONS

The Horizon team evaluated various options for achieving lunar outpost objectives, based on concerns for economy and technical practicality. Given these considerations, it was determined that an equatorial launch site would best serve the program. Principal factors influencing these requirements were the:

1. Operational need for having an orbital station in an equatorial orbit to simplify rendezvous;
2. High payload penalty and complexity of trajectory involved in "dog-legging" into equatorial orbit from a non-equatorial launch site; and,
3. Magnitude of effort required to implement the objectives of this operation.

Horizon planners felt that existing launch facilities in Florida and California were already heavily committed and, in any event, were too far from the equator for optimum performance of Saturn launch vehicles. Accordingly, four equatorial sites were evaluated: Christmas Island in the Central Pacific, south of Hawaii; equatorial Brazil; Somalia in West Africa; and, Manus Island in the Bismark Sea in the western Pacific. All were within 2° N or S of the equator. While it was felt that the Brazil and Christmas Island sites would be best suited, it was recognized that selection could only be made following discussions with the nations involved, together with a determination of relative costs and estimates of the time needed for construction. Medaris later said, in 1974, that the Army had contacted Brazilian officials about a proposed launch site in that country. These officials gave tentative approval, but the U.S. State Department objected [20].

Launch Facilities

Launch facilities were designed around four complexes that consisted of eight launch pads, eight vertical structures, and four blockhouses. One of these complexes is shown in Figure 12. Information was provided by the Horizon team on:

1. Launch and control, including blockhouse design, launch pads, propellant storage, and instrumentation for control facilities;
2. Technical operations, including checkout buildings, vehicle storage, payload storage, technical shops and test facilities, and medical laboratories and holding facility;
3. Service and logistical facilities, including roads, sewage treatment plants, waste incinerator, water supply, construction camp and port and airfield support; and,
4. Housing and community facilities.

Communications

The importance of communications to Horizon's success was emphasized. At the time the report was written, a communications satellite program was evolving in the United States. Drawing on knowledge of it, and supplementing ongoing technical efforts where necessary, the study team proposed that the following facilities be established:

Earth-based communication
    Lunarcom terminal

Launch site and downrange facilities
U.S. control center
Worldwide communications links among all of the above and the tracking stations.

Lunar-based communications
Lunarcom terminal (vehicle and outpost)
VHF lunar net system
Emergency link
Terminal facilities.

The overall communications system was designed to be interconnected to an Earth-based lunarcom terminal, which would monitor and/or control launch site activity, tracking and communications stations (located downrange and worldwide), orbital operations, space vehicles in flight and lunar outpost activities. Use would be made of evolving NASA tracking facilities wherever possible, but additional sites would be established, as needed, to support the program.

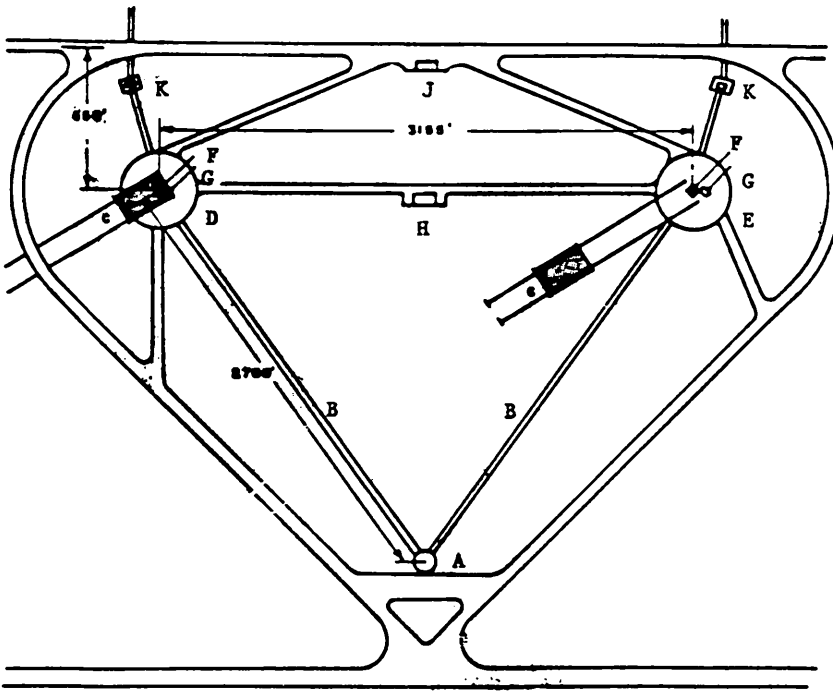

Figure 12 Drawing of launch-facility complex.

THE DEMISE OF HORIZON

During a 2-week period following the publication of the Horizon report, Frank Williams, Harry H. Lowe, and representatives from the Quartermaster and Signal Corps briefed Secretary of the Army Brucker, Generals Taylor and Trudeau, and other officials at the Pentagon in Washington, D.C. When it became apparent that there would be no major role in space for the Army, Williams and ABMA Captain Homer J. Finch were instructed to tighten up the Horizon report to make it more suitable for a civilian-led (e.g. NASA) enterprise. By September, the revised two-volume version was completed (it carried, however, a 9 June date [11]) and ". . . re-submitted through channels to the Chief of Staff, just a month before the President

[Eisenhower] announced that the Army was being phased out of the space business. In March 1960, the Chief of Staff forwarded the study to the Secretary of Defense for submission to NASA" [21].

Although Eisenhower announced the transfer of the von Braun team to the space agency in October 1959, the action would not be consummated until 1 July 1960.

NASA Administrator T. Keith Glennan does not recall Horizon or receiving in March 1960 a lunar outpost proposal from the Army under any name [22]. NASA historian Lee Saegesser could find little information on Horizon in the headquarters historical files, other than a copy of the report itself [23].

John H. Disher, at the time NASA's chief of Advanced Manned Systems and member of the Research Steering Committee on Manned Space Flight, does not remember receiving the Horizon report [24], noting that its timing would have been poor, and that its security classification would have inhibited the diffusion of ideas contained therein. When asked if he had discussed lunar exploration in general with ABMA team members in 1959, he answered, "Yes, I do remember those kinds of discussions with Hermann Koelle, and I am sure he would have talked about lunar bases." But he added that "I just don't remember the Horizon input . . ." to ongoing lunar planning with the NASA organization. He summed up that ". . . the Saturn launch vehicles were the early input to Apollo from Huntsville, and that because of secrecy, polarization [example: spacecraft-flight mission versus launch vehicle considerations], institutional provincialism, and personalities, the Horizon study had little impact on the Apollo decision . . . [I] can't recall," he concluded, "anything about Horizon—nor do my notes from that period mention Horizon or the contact of what was called Horizon."

Despite the above recollections, Koelle states that "During and after the transfer [of ABMA's Development Operations Division team] to NASA, Dr. v. B. was the primary interface to NASA top management. He kept the idea alive and . . . our proposal was one of the major inputs to the decision [by President Kennedy] to go to the Moon in 1961."

Former NASA Director of Launch Vehicles, Milton Rose, concurs on the unfortunate timing of Horizon. He remembers giving a briefing to President Eisenhower in the autumn of 1959 at Glennan's request:

> . . . just to let him know the kind of advanced thinking that was going on within NASA at the time. My briefing, which described a manned expedition to the Moon, was not a proposal for what we *should* do, only what we *might* do at some future date. While people in the room thought the briefing was stimulating, President Eisenhower was very negative. The last thing he wanted was a headline somewhere saying 'NASA Planning Flight to the Moon!' [25].

Whatever influence Horizon may or may not have had on Apollo planning, several years after its publication, efforts were made to remove its restrictive distribution constraint. At the request of the chairman, George P. Miller of the U.S. House of Representatives' Committee on Science and Astronautics, the report was declassified and turned over to the committee in October 1962. At the time, an

item in the *Washington Post* reported that the Associated Press had obtained access to the study a month earlier and had reported that Horizon was a ". . . virtual blueprint for landing men on the moon in April 1965" [26].

Despite the removal of its classification, Project Horizon received relatively little attention in the ensuing years. John M. Logsdon in his *The Decision to Go to the Moon*, published in 1970 [27], devotes a number of paragraphs to it, observing that "With the loss of the von Braun team, Army plans for manned space flight came to an end . . . ." Courtney G. Brooks, James M. Grimwood and Loyd S. Swenson, Jr., in their *Chariots for Apollo: A History of Manned Lunar Spacecraft* (1979) gave it scant attention [28]. As for NASA's *The Apollo Spacecraft: A Chronology* [29], it offers two entries, one noting the beginning of Horizon in March 1959 and the other the completion of the report 3 months later in June.

LUNAR OUTPOST PLANNING IN POST-HORIZON PERIOD

Studies of lunar outposts and bases continued in the post-Horizon period. In February 1960, ABMA released a report entitled *A Lunar Exploration Program Based Upon Saturn-boosted System* [30], that was clearly influenced by considerations already covered in Horizon. Once Apollo became an approved program, many in the space community assumed that outpost and base development would inevitably follow the early lunar landings. The present authors devoted an entire chapter to the subject in their book *Applied Astronautics* [31]. In "Antarctic Research and Lunar Exploration" [32], Rodney W. Johnson of NASA and Philip M. Smith of the National Science Foundation drew analogies between polar and lunar construction methods and techniques. These are but two examples of many studies that appeared during the pre- and post-Apollo years.

NASA post-Apollo planning called for a permanent manned presence on the Moon. In *America's Next Decades in Space: A Report for the Space Task Group* [33], a three-phase program was proposed. "The first phase, Apollo follow-on, will use basic Apollo equipment modified to increase payloads and provide greater mobility," the report suggested. "The second phase begins with the establishment of a base in lunar polar orbit, from which it will be possible to descend to any portion of the lunar surface for stays of up to 14 days. The third phase is initiated with the start of the build-up of a permanent lunar surface base." The Space Task Group for which NASA had prepared the report, was established on 13 February 1969 at the direction of President Nixon, who wrote "It is necessary for me to have in the near future, definitive recommendation on the direction which the U.S. space program should take in the post-Apollo period."

The Space Task Group's own recommendations were contained in a report entitled *The Post-Apollo Space Program: Directions for the Future* [34], which observed that "An orbiting lunar station, followed by a surface-base, building upon Earth orbital space station and space transportation system developments, could be developed as early as the latter half of the [1970s] decade."

For a variety of reasons, most of the Space Task Group's recommendations were ignored, and America did not embark on a major post-Apollo space program

that might have included a lunar base as an option. Milton Rosen [25] recalls the events:

> I assembled material for Paine and represented NASA on the working group (chaired by Russell Drew for the President's Science Advisor) that debated what should go into the final report. Paine wanted approval of all three [major] projects described in the report, the Space Shuttle, the Space Station, and a manned mission to Mars. But Lieutenant General Hinrichs (Department of Defense representative on the working group) told me repeatedly that the only project [Air Force Secretary Robert C.] Seamans would approve was the Space Shuttle.
>
> When I relayed this to Paine, he said, 'Sell the Shuttle if you can, but I'm holding out for everything!' It was apparent to me (and I so advised Paine) that we had to have DOD support to win anything. As you know, the Space Task Group project that was approved (2 years later) was the Shuttle.

Rosen added that:

> Something that surprises me about Project Horizon, as you describe it, is their apparent inability to foresee that the Space Station would precede either the lunar base or a manned mission to Mars. I believe the Space Station will occupy NASA for the rest of this century and that lunar base and men to Mars projects will come, but in the next century....

This will probably turn out to be true. In the meantime, during the 1970s and 1980s, occasional lunar outpost and base studies appeared, as interest in the subject persisted. Typical of the mid-1970s were two papers that appeared in *Spaceflight*: D. J. Sheppard's "Concrete on the Moon" [36] and John Dossey and Guillermo Trotti's "Counterpoint: A Lunar Colony" [37]. In the present decade, a milestone was achieved on 29, 30, and 31 October 1984, when a well-attended symposium, "Lunar Bases and Space Activities of the 21st Century," was held at the National Academy of Sciences in Washington, D.C. During his opening remarks, NASA Administrator, James M. Beggs recalled that "Wernher von Braun used to say that if people are ever to open vast uncharted regions to detailed exploration and permanent human habitation, they need an enabling technology. In the case of Antarctica . . . it was the airplane. In the case of space, it will be the Space Station and its infrastructure." Beggs went on to say that one of the future missions ". . . could very well be the establishment of a permanently manned lunar base. That's why this conference is so important. It will help us move toward a national dialogue in the scientific and technical community on the uses, feasibility and significance of a lunar base" [38]. A second symposium on "Lunar Bases and Space Activities of the 21st Century" is scheduled to be held in Houston, Texas, U.S.A. on 5-7 April 1988.

In 1986, President Reagan's National Commission on Space proposed that "We return to the Moon, not only for brief expeditions, but for longer, systematic explorations; eventually, we should come to stay" [39]. The Commission continued with the recommendation that "Establishing human-tended lunar surface outposts, primarily for a variety of scientific studies," should be the first stage of a return to the Moon. Then, "As revisits to the Moon become more frequent, the need will certainly grow for larger permanent 'base camps,' to serve as supply centers, local research laboratories, and medical centers for explorers taken ill or injured."

Since the appearance of the Commission's report, NASA began to examine the lunar outpost/base option in some detail. During the spring of 1987, the Johnson Space Center announced it would issue study contracts dealing with lunar base utilization, advanced lunar transportation lunar base systems study, and related subjects [40].

Then, on 1 June 1987, NASA Administrator James C. Fletcher announced the creation at headquarters of an Office of Exploration to coordinate activities that would ". . . expand the human presence beyond Earth . . . In particular, it will focus on studies of potential lunar and Mars initiatives." Astronaut Sally K. Ride was named acting assistant administrator until September, when she left the agency. While at NASA, she supervised studies to determine possible new space initiatives for the United States. One of these was the establishment of a scientific base and permanent manned presence on the Moon [41]. The new office concentrates on mission concepts, facilities, utilization, resource requirements, and science opportunities [42].

The Ride report [43], which was released to Fletcher on 17 August 1987, offered four "leadership initiatives:" mission to planet Earth; exploration of the Solar System; outpost on the Moon; and, humans to Mars. It had this to say about the outpost: "Beginning with robotic exploration in the 1990s, this initiative would land astronauts on the lunar surface in the year 2000, to construct an outpost that would evolve in size and capability and would be a vital, visible extension of our capabilities and our vision." The report stressed that the lunar initiative ". . . is designed to be evolutionary, not revolutionary. Relying on the Space Station for systems and subsystems, for operations experience, and for technology development and testing, it builds on, and gradually extends, existing capabilities."

Do the Ride recommendations portend the establishment of a United States lunar outpost program? Only time will tell. But, when such a program is sooner or later approved, planners may find it worthwhile to peruse the old Horizon report. Despite some questionable assumptions—optimistic cost estimates and high launch rates being the most obvious—the report contains ideas that are still valid three decades after its publication:

> The question of a permanent human presence on the Moon is really one of who and when, not if. Lunar science has the potential to properly evaluate a future prospect. In the valuable lead time that we have prior to a manned return to the Moon, continued lunar research will prepare us for the time when the Moon will really be part of our neighborhood.
>
> Most scenarios for lunar base development call for initial exploratory sorties before an operational facility is established . . . . In scientific terms, the return of humans to the Moon will lead to new vistas of exploration about which we can only dream at present.
>
> From, "Status and Future of Lunar Geosciences,"
> NASA SP-484, pp.44-45. Washington, D.C., U.S.A. (1986).

ACKNOWLEDGEMENTS

The authors are most grateful for the invaluable assistance accorded them during the preparation of this paper. Mrs. Nancy Stilson and staff of the Redstone

Scientific Information Center, Redstone Arsenal, Huntsville, Alabama, U.S.A.; Mr. David Harris, and especially Mrs. Ruth Patton, U.S. Army Missile Command in Huntsville, provided continuous help. Thanks are also given to the staff of the Alabama Space and Rocket Center in Huntsville, to Mr. Lee Saegesser and the NASA History Office in Washington, D.C. and to Department of Defense and Department of the Army history staff, also in Washington, D.C. The paper could not have been completed without the close cooperation of several participants in the Horizon effort. These include Brigadier General Rutledge P. Hazzard, U.S. Army (ret.), Dr. Heinz Hermann Koelle, Dr. Ernst Stuhlinger, and Mr. Frank L. Williams. Comments by former NASA Headquarters officials Dr. T. Keith Glennan, Mr. John H. Disher and Mr. Milton Rosen are also deeply appreciated. Mr. Joseph Moquin, chief executive officer, Teledyne Brown Engineering, Inc. in Huntsville, Alabama, was always most helpful. Valuable assistance was also provided by the venerable (Major General) John Bruce Medaris, U.S. Army (ret.). Frank H. Winter, National Air and Space Museum, Smithsonian Institution, Washington, D.C. and Saunders B. Kramer reviewed the entire manuscript and offered many helpful suggestions, for which the authors are most endebted. The authors also thank Mr. James Patrick Gardner for his assistance.

REFERENCES

1. See, for example, M. H. Nicolson, *Voyages to the Moon*, Macmillan, New York (1948); W. Ley, *Rockets, Missiles and Space Travel* and *Rockets, Missiles and Man in Space*. New York (1944, 1951, other editions to 1968); W. von Braun and F. I. Ordway III, *History of Rocketry and Space Travel*. Crowell, New York (1966, 1969 and 1975); and *Space Travel: A History* (by W. von Braun, F. I. Ordway III and D. Dooling). Harper & Row, New York (1985).

2. D. Lasser, *The Conquest of Space*, Penguin, New York (1931); Hurst & Blackett, London (1932).

3. P. E. Cleator, *Rockets Through Space, or the Dawn of Interplanetary Travel*. Allen & Unwin, London (1936); Simon & Schuster, New York (1936).

4. G. V. E. Thompson, The lunar base. *J. Br. Interplanet. Soc.* 10, No. 2, 49-70 (1951).

5. A. C. Clarke, What will we do with the moon? *Pop. Sci.* April, 164-167, 264 (1952).

6. C. Ryan, W. von Braun, F. L. Whipple and W. Ley, *Conquest of the Moon* (Edited by C. Ryan). Viking, New York (1953).

7. Project Horizon Phase I Report: A U.S. Army Study for the Establishment of a Lunar Military Outpost. U.S. Army Ordnance Missile Command, Redstone Arsenal, Ala., 8 June (1959). Vol. I, *Summary*, 57pp.; Vol. II, *Technical Considerations and Plans*, 289pp.; Vol. III, *Operational Aspects*, 228pp.; and Vol. IV, *Technical Service Capabilities and Support*, 234pp. (brown cover).

8. For a short period, Horizon was code-named Project Mountain Top.

9. See, for example, H. H. Koelle, F. L. Williams and W. G. Huber, *Saturn System Study*. U.S. Army Ordnance Missile Command, Redstone Arsenal, Ala., 13 March (1959): It is interesting to read the following: "An assumption had to be made [in the report] on the total number of vehicles expected to be required as well as the firing rate during the time period of interest. A total of 100 flights for the time period 1960 through 1964 was used. This is considered a typical and realistic national requirement, as seen by this group. Basically, these 100 fights were assumed to consist of 60 low altitude orbital flights, 20-high-altitude orbital flights of the 24-hour orbit variety, and 20 lunar or deep-space flights. This missile distribution is considered typical."

10. W. von Braun, E. Stuhlinger and H. H. Koelle, *ABMA Presentation to the National Aeronautics and Space Administration*, Report D-TN-1-59. Army Ballistic Missile Agency, Redstone Arsenal, Ala., 15 December (1958). It is useful to note that others were looking into the subject at about the same time. See, for example, R. D. Holbrook, *Lunar Base Planning Considerations,* Report No. P-1436. Rand Corp., Santa Monica, Calif., 24 February (1958).

11. Project Horizon Report: A U.S. Army Study for the Establishment of a Lunar Outpost. U.S. Army Ordnance Missile Command, Redstone Arsenal, Ala., 9 June (1959). Vol. I, *Summary and Supporting Considerations,* 118pp.; and Vol. II, *Technical Considerations & Plans*, 307pp. (green cover).

12. H. B. Joiner, *History of Headquarters U.S. Army Ordnance Missile Command, Redstone Arsenal, Alabama, 1 January-30 June 1960.* U.S. Army Ordnance Missile Command, Redstone Arsenal, Ala., 1 November (1960).

13. H. H. Koelle interview by Ordway and Sharpe at Innsbruck, Austria during the *37th International Astronautical Congress*, 5-10 October 1986, and follow-on letter and enclosures to Ordway dated 30 November 1986.

14. F. L. Williams interviews by Ordway beginning on 22 June 1985 in Slidell, La., subsequent meetings in Washington, D.C., telephone interviews on 24 June 1987 and other dates, and comments on draft dated 10 August 1987.

15. R. P. Hazzard (Brigadier General U.S. Army, ret.) interviewed by Ordway in Washington, D.C. on 5 January 1987 and numerous telephone conversations before and after that date.

16. The venerable John Bruce Medaris (Major General U.S. Army ret.) interview by Frederick I. Ordway, Washington, D.C. on 10 March 1989 and follow-up telephone interviews on 22 and 25 March 1989, Highlands, North Carolina from Arlington, Virginia.

17. E. Stuhlinger interview by Sharpe, Huntsville, Ala., 25 February 1987 and by Ordway, Huntsville, Ala., 15 June 1987.

18. As in note 16.

19. B. Casebolt, Plan drafted here in 1959 for Moon outpost. *The Huntsville Times* 4, 9 October (1974).

20. *Op. Cit, History of Army Ordnance Missile Command.* Other sources state the exact date the revised two-volume report was forwarded to the Secretary of the Army was 4 September 1959.

21. *Ibid.*

22. T. K. Glennan interview by Ordway, McLean, Va., 5 March 1987.

23. L. Saegesser interview by Ordway, NASA Headquarters History Office, Washington, D.C., 5 March 1987.

24. J. H. Disher interview by Ordway, Washington, D.C., 29 May 1987 and by Ordway and Wakeford, Washington, D.C., 29 June 1987, and follow-up comments on 30 July 1987.

25. M. Rosen interview by Ordway, 29 May 1987, Washington, D.C. and letter to Ordway dated 31 July 1987. Reference is made to M. W. Rosen and F. C. Schwenk, A rocket for manned lunar exploration. In *Xth International Astronautical Congress Proceedings*, London. Springer, Vienna (1960).

26. Moon study is released by Pentagon. *Washington Post* 11 October (1962). See also, Moss hits secrecy on U.S. Moon study. *New York Times* 25 September (1962) and Moon study gets security treatment. *Washington Evening Star* 25 September (1962).

27. J. M. Logsdon, *The Decision to Go to the Moon.* MIT Press, Cambridge, Mass. (1970).

28. C. G. Brooks, J. M. Grimwood and L. S. Swenson Jr, *Chariots for Apollo: A History of Manned Lunar Spacecraft*. NASA, Washington, D.C. (1979).

29. I. D. Ertel and M. L. Morse, *The Apollo Spacecraft: A Chronology*, Vol. I (through 7 November 1962). NASA, Washington, D.C. (1969).

30. *A Lunar Exploration Program Based upon Saturn-boosted Systems*. U.S. Army Ordnance Missile Command, Redstone Arsenal, Ala., 1 February (1960). U.S.

31. F. I. Ordway III, J. P. Gardner, M. R. Sharpe, Jr. and R. C. Wakeford, *Applied Astronautics: An Introduction to Space Flight*. Prentice-Hall, Englewood Cliffs, N.J. (1963). See Chap. 7, "Exploration, Colonization, and Exploitation of the Solar System."

32. R. W. Johnson and P. M. Smith, Antarctic research and lunar exploration. In *Advances in Space Science and Technology* (Edited by F. I. Ordway III). Academic Press, New York (1970). (Of interest is the fact that the Horizon team had earlier hired Dr. Paul Siple as a consultant. He had been at Little America in the Antarctic with Admiral Richard Byrd.)

33. *America's Next Decades in Space: A Report for the Space Task Group*. NASA, Washington, D.C. (1969).

34. *The Post-Apollo Space Program: Directions for the Future*. U.S. Government Printing Office, Washington, D.C. (1969). (Space Task Group Report to the President. The chairman was Spiro T. Agnew, Vice President of the United States; and members were Robert C. Seamans, Secretary of the Air Force; Thomas O. Paine, Administrator, NASA; and Lee A. DuBridge, science advisor to the President).

35. As in note 25.

36. D. J. Sheppard, Concrete on the Moon, *Spaceflight*. 17, No. 3, 91-93, 120 (1975).

37. J. Dossey and G. Trotti, Counterpoint: a lunar colony. *Spaceflight* 17, No. 7, 259-268 (1975).

38. J. M. Beggs, *Remarks, Lunar Base Symposium*. National Academy of Sciences, Washington, D.C., 29 October (1984).

39. *Pioneering the Space Frontier: The Report of the National Commission on Space*. Bantam Books, New York (1986). (Thomas O. Paine, former NASA Administrator, was Chairman of the Commission. Fourteen other members served with him).

40. C. Covault, Moon base gaining support as new U.S. space goal. *Aviat. Wk. & Space Technol.* 126, No. 19, 22-24 (1987).

41. C. Covault, Ride panel will urge lunar base, Earth science as new space goals. *Aviat. Wk. & Space Technol.* 127, No. 2, 16-18 (1987).

42. NASA Establishes Office of Exploration. *Lunar News* No. 49, Summer (1987), Planetary Materials Branch, Solar System Exploration Division, NASA Johnson Space Center, Houston, Tex.

43. S. K. Ride, *Leadership and America's Future in Space*. NASA, Washington, D.C. (1987). See C. Covault, Ride panel calls for aggressive action to assert U.S. leadership in space. *Aviat. Wk. & Space Technol.* 127, No. 8, 26 (1987); P. M. Boffey, Panel urges lunar station as step to Mars. *New York Times* 18 August B-1 (1987); K. Sawyer, Study urges missions to Moon, Mars. *The Washington Post* 18 August, 1 (1987); C. Norman, Space program said to lack direction. *Science* 238, No. 4818, 965 (1987); and Sally Ride on America's future in space. *Space World* X-9-285, 25 (1987).

ADDENDA: Role of the Technical Services in Horizon

The Ordnance Corps directed the Horizon effort from the beginning of the study to the publication of the final report; and, had Horizon gone forward as an approved project, would have developed the launch vehicles, spacecraft and other elements. The responsibilities of the other services were to have been as follows:

1. *Corps of Engineers:* responsible for construction of launch site on Earth; mapping of Moon's visible surface in detail by terrestrial astronomic photography; design and construction of an environmental simulator; and construction and maintenance of the lunar outpost.

2. *Signal Corps:* responsible for ground, worldwide and real-time system between ground terminal, launch site, computation centers, lunar base, tracking stations, etc.; vehicular communications between in-flight vehicles and lunar and terrestrial points; and lunar base communications including lunar intercom, outpost-to-vehicle, outpost-to-man and man-to-man links.

3. *Army Medical Service:* responsible for establishing requirements for, and participating in research of, vehicular environments; assist in selection, and prepare medically, physically and mentally qualified personnel for lunar operation; protect health of personnel at equatorial launch site on Earth, orbital station and lunar base; and determine optimal nutritional, psychological and physiological requirements to sustain health at all points of activity.

4. *Quartermaster Corps:* responsible for research, development, logistic support and material required in such areas as food, space clothing (in cooperation with the Medical Services), packaging and general supplies. Among these supplies would be hand tools, sleeping gear, multipurpose shipping containers, lubricants, heaters, repair parts for quartermaster equipment, materials handling equipment, food servicing and personnel sanitation equipment, and even recreation supplies.

5. *Transportation Corps:* responsible for development of lunar surface transportation devices for personnel and material, including methods of retrieving payload delivered to lunar outpost and transporting scientific expeditions and patrols on lunar surface; participation in environmental research and in the development of cargo retrieving and landing gear; transportation services for logistics on Earth; and traffic management for Earth logistics and cargo delivery to and from the lunar outpost.

6. *Chemical Corps:* responsible for detection of dangerous concentrations of chemical, biological and radiological matter (CBR), in whatever atmosphere that might be found on the Moon; decontamination materials and procedures; protection of man from CBR atmospheres (masks and collective protectors); and development of compact and efficient CBR laboratory for assessment of hazards to man at lunar outpost. Chemical Corps personnel were also to assist other Technical Services in studies of health hazards, development of oxygen generation equipment for outpost and study of medical factors related to spacesuits.